TR-A01-IN Plastic waterproof joint

Specifications

Bracket	TR-A01-IN
Application	Indoor and outdoor
Dimensions(L × W × H)	Ø37mm*46mm (1.45”~1.81”)
Weight	0.023kg(0.05lb)
Material	Plastic

Dimensions

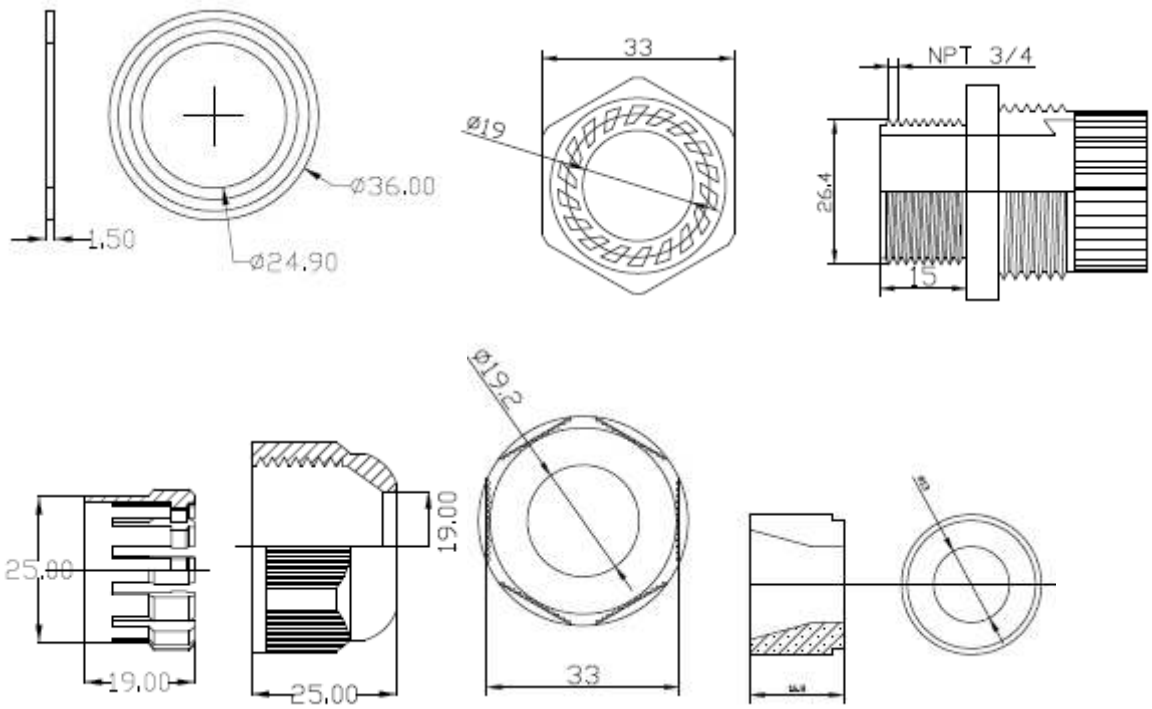

Zhejiang Uniview Technologies Co.,Ltd.

South Tower, Building 10, Wanlun Science Park, 88 Jiangling Road, Hangzhou, P.R.China 310051

Email：overseasbusiness@uniview.com;globalsupport@uniview.com

http://www.uniview.com

©2018 Zhejiang Uniview Technologies Co.,Ltd. All rights reserved.

*Product specifications and availability are subject to change without notice.