Tiandy

TC-C35US Spec: I8/A/E/Y/M/2.8-12mm/V4.0

5MP Motorized Starlight IR Bullet Camera

Lite Series

KEY FEATURES

- Full Metal Housing
- Motorized Lens 2.8-12mm
- Up to 2592x1944@20fps
- S+265/H.265/H.264
- Min. illumination Color: 0.002Lux@F1.6
- 120dB WDR
- Smart IR, IR Range: 80m
- Support tripwire and perimeter
- Built-in Mic, SD Card Slot, Reset Button
- Operating Conditions -40°C~60°C, 0~95% RH
- POE, IP67

Tiandy Technologies Co.,Ltd.
Email: sales@tiandy.com Tel: +86-22-58596178
Website: en.tiandy.com Fax: +86-22-58596048

Tiandy

SPECIFICATIONS

Camera	
Image Sensor	1/2.8" CMOS
Signal System	PAL/NTSC
Min. Illumination	Color: 0.002Lux@ (F1.6, AGC ON), B/W: 0Lux with IR
Shutter Time	1s to 1/100,000s
Day & Night	Dual IR Cut Filter with Auto Switch
Wide Dynamic Range	120dB
Angle Adjustment	Bracket, pan 0~360°, tilt 0~75°, roate 0~360°
Lens	
Lens Type	Motorized
Focus	2.8-12mm
Lens Mount	Φ14
Aperture	F1.6~F3.3, Fixed
FOV	Horizontal field of view: 96.8°~32.7°
Illuminator	
IR LEDs	4
IR Range	Up to 80m
Wavelength	850nm
White LEDs/Warmlights	N/A
Compression Standard	
Video Compression	S+265/H.265/H.264
Video Bit Rate	32Kbps~6Mbps
Audio Compression	G.711/G.711U/ADPCM
Audio Bit Rate	8K~48Kbps
Image	
Max. Resolution	2592×1944
Main Stream	PAL: 20fps (2592×1944, 2592×1520), 25fps (2560×1440, 2304×1296, 1920×1080, 1280×720)
	NTSC: 20fps (2592×1944, 2592×1520), 25fps (2560×1440), 30fps (2304×1296, 1920×1080, 1280×720)
Sub Stream	PAL: 25fps (704×576, 704×288, 640×360, 352×288)
	NTSC: 30fps (704×480, 704×240, 640×360, 352×240)
Third Stream	N/A
Image Setting	Saturation, brightness, contrast, sharpness, adjustable by client software or web browser
Image Enhancement	BLC/3D DNR/HLC
ROI	N/A
OSD	16×16, 32×32, 48×48, 64×64, adaptable size, Letters Such as Week, Date, Time, Total 3 Regions
Picture Overlay	N/A
Privacy Mask	Yes, 4 regions
Smart Defog	Yes
Feature	
Alarm Trigger	Motion Detection, Mask Alarm, IP Address Conflict
Video Analytics	Tripwire, Perimeter
Early Warning(EW)	N/A

Tiandy

Network	
ANR	N/A
Protocols	TCP/IP, HTTP, FTP, DHCP, DNS, DDNS, IPV4, NTP, UDP, Telnet, ICMP, RTP, RTSP, UPnP
System Compatibility	ONVIF (PROFILE S/T/G), SDK, CGI (IE), P2P(Mutually exclusive with Profile G)
Remote Connection	≤7
Client	Easy7, EasyLive
Web Version	Web5
Interface	
Communication Interface	1 RJ45 10M/ 100M self adaptive Ethernet port
Audio I/O	Mic in
Alarm I/O	N/A
Reset Button	Yes
On-board storage	Built-in MicroSD card slot, up to 512 GB
General	
Firmware Version	-
Web Client Language	15 languages English, Russian, Spanish, Korean, Italian, Turkish, Simple Chinese, Traditional Chinese, Thai, French, Polish, Dutch, Hebraism, Arabic, Vietnamese
Operating Conditions	-40°C ~ 60°C, 0 ~ 95% RH
Power Supply	DC 12V±25%, PoE (802.3af)
Power Consumption	MAX: 9W (12V) MAX: 10W (PoE)
Protection	IP67, Lightning protection, surge protection and voltage transient protection meets EN 55035:2017
Heater	N/A
Dimensions	239×90×90mm (9.41×3.54×3.54inch)
Weight	0.93Kg (2.05lb)

* Listed resolutions are only selectable options. It does not mean that all streams can work at their maximum resolution at the same time.

AVAILABLE MODEL

TC-C35US SPEC: I8/A/E/Y/M/2.8-12MM/V4.0

Tiandy

DIMENSIONS

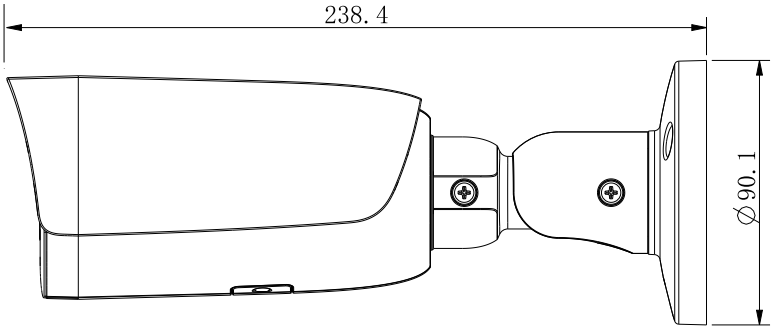

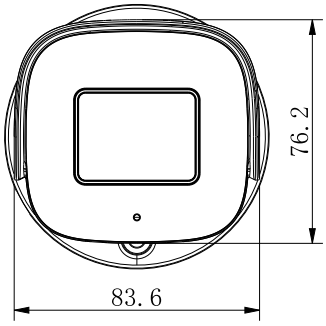

ACCESSORIES

A35
CORNER MOUNT

TC-P54BM SPEC: V5
JUNCTION BOX

A36
POLE MOUNT

DISTRIBUTED BY

Tiandy Technologies Co.,Ltd.
Email: sales@tiandy.com Tel: +86-22-58596178
Website: en.tiandy.com Fax: +86-22-58596048