Tiandy

TC-C32KN Spec: I3/E/Y/2.8mm

2MP Fixed IR Dome Camera

Lite Series

KEY FEATURES

- Metal+Plastic Housing
- Up to 1920x1080@30fps
- S+265/H.265/H.264
- Min. illumination Color: 0.02Lux@F2.0
- Smart IR, IR Range: 30m
- Support tripwire and perimeter
- Built-in Mic, SD Card Solt, Reset Button
- Operating Conditions -35°~65°, 0~95% RH
- POE, IP67, IK10

Tiandy Technologies Co.,Ltd.
Email: sales@tiandy.com Tel: +86-22-58596178
Website: en.tiandy.com Fax: +86-22-58596048

Tiandy

SPECIFICATIONS

Camera	
Image Sensor	1/2.9" CMOS
Signal System	PAL/NTSC
Min. Illumination	Color: 0.02Lux@ (F2.0, ACG ON), B/W: 0Lux with IR
Shutter Time	1s to 1/100,000s
Day & Night	Dual IR Cut Filter with Auto Switch
Wide Dynamic Range	Digital WDR
Angle Adjustment	pan 0~330°, tilt 0~75°, roate 0~350°
Lens	
Lens Type	Fixed
Focus	2.8mm
Lens Mount	M12
Aperture	F2.0, Fixed
FOV	Horizontal field of view: 97.4°
Illuminator	
IR LEDs	8
IR Range	Up to 30m
Wavelength	850nm
White LEDs/Warmlights	N/A
Compression Standard	
Video Compression	S+265/H.265/H.264
Video Bit Rate	32Kbps~6Mbps
Audio Compression	G.711/G.711U/ADPCM
Audio Bit Rate	8K~48Kbps
Image	
Max. Resolution	1920x1080
Main Stream	PAL: 25fps (1920×1080, 1280×720, 704×576, 640×480)
	NTSC: 30fps (1920×1080,1280×720, 704×480, 640×480)
Sub Stream	PAL: 25fps (704×576, 704×288, 640×360, 352×288)
	NTSC: 30fps (704×480, 704×240, 640×360, 352×240)
Third Stream	N/A
Image Setting	Saturation, brightness, contrast, sharpness, adjustable by client software or web browser
Image Enhancement	BLC/3D DNR/HLC
ROI	N/A
OSD	16×16, 32×32, 48×48, adaptable size, Letters Such as Week, Date, Time, Total 3 Regions
Picture Overlay	N/A
Privace Mask	Yes, 4 regions
Smart Defog	Yes
Feature	
Alarm Trigger	Motion Detection, Mask Alarm, IP Address Conflict
Video Analytics	Tripwire, Perimeter
Early Warning(EW)	N/A

Tiandy

Network	
ANR	Yes, auto store video in SD card when NVR disconnected, and upload video to NVR when resumed connection (Only Support Tiandy ANR NVR)
Protocols	TCP/IP, HTTP, FTP, DHCP, DNS, DDNS, MULTICAST, IPV4, NTP, UDP, Telnet
System Compatibility	ONVIF (PROFILE S/T/G), SDK, P2P(Mutually exclusive with Profile G)
Remote Connection	≤7
Client	Easy7, EasyLive
Web Version	Web5
Interface	
Communication Interface	1 RJ45 10M/ 100M self adaptive Ethernet port
Audio I/O	Mic in
Alarm I/O	N/A
Reset Button	Yes
On-board storage	Built-in MicroSD card slot, up to 512 GB
General	
Firmware Version	-
Web Client Language	16 languages English, Russian, Spanish, Korean, Italian, Turkish, Simple Chinese, Traditional Chinese, Thai, French, Polish, Dutch, Hebraism, Farsi, Arabic, Vietnamese
Operating Conditions	-35°C～65°C, 0～95% RH
Power Supply	DC 12V±25%, PoE (802.3af)
Power Consumption	MAX: 5W (12V) MAX: 6W (PoE)
Protection	IP67,IK10,Lightning protection, surge protection and voltage transient protection meets EN 55035:2017
Heater	N/A
Dimensions	Φ120×90mm (Φ4.72×3.54inch)
Weight	0.4Kg (0.88lb)

* Listed resolutions are only selectable options. It does not mean that all streams can work at their maximum resolution at the same time.

AVAILABLE MODEL

TC-C32KN SPEC: I3/E/Y/2.8MM

Tiandy

DIMENSIONS (Unit: mm)

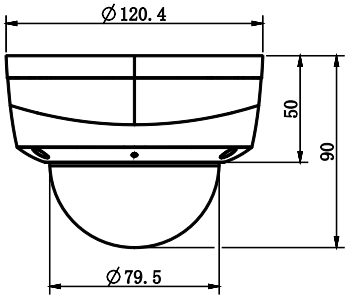

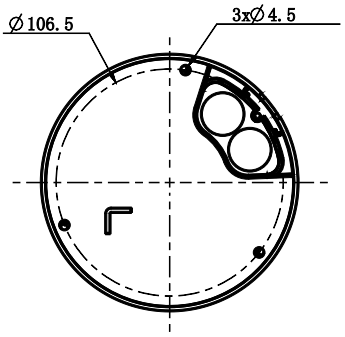

ACCESSORIES

A36
Pole Mount

A35
Corner Mount

811
Junction Box

A29
Wall Mount

A25
Corner/Pole Mount

A20
Pendant Mount

DISTRIBUTED BY

Tiandy Technologies Co.,Ltd.
Email: sales@tiandy.com Tel: +86-22-58596178
Website: en.tiandy.com Fax: +86-22-58596048