mm [inch]

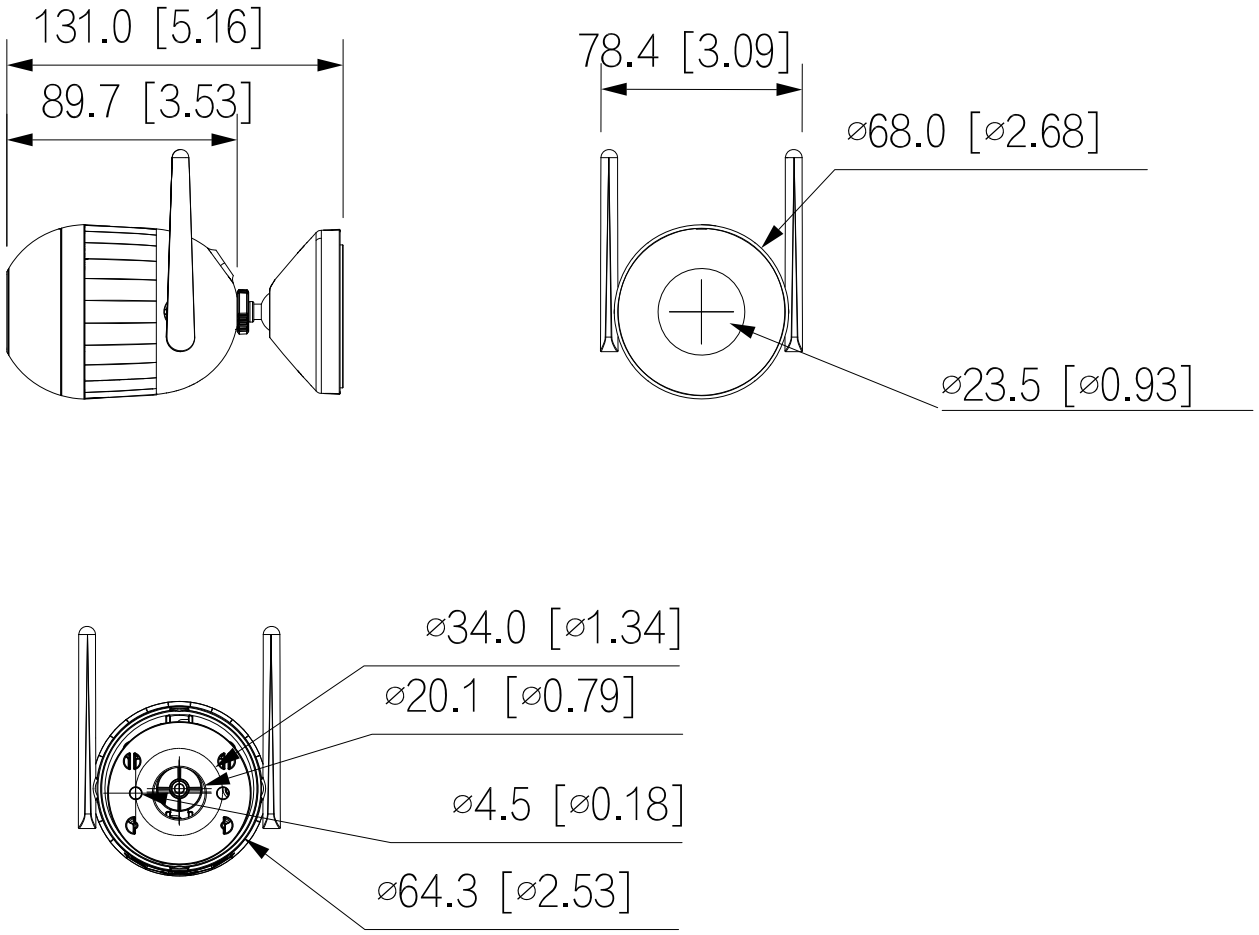
131.0 [5.16]
89.7 [3.53]
78.4 [3.09]
⌀68.0 [⌀2.68]
⌀23.5 [⌀0.93]
⌀34.0 [⌀1.34]
⌀20.1 [⌀0.79]
⌀4.5 [⌀0.18]
⌀64.3 [⌀2.53]