FV18

Multi-Biometric Finger Vein and Fingerprint Standalone Time Attendance & Access Control Terminal

FV18 is a multi-biometric reader capable of capturing and processing finger vein and fingerprint biometric data at the same time. The new hardware platform uses ZMM220 core-board with 1.2Ghz CPU. With optimization of both hardware platform and algorithm, FV18 is one of high recognition rate, high security & high speed terminal. The device offers flexibility of both standalone installation and installation with any third-party access control panels which support standard wiegand signal.

Features

- Multi-Biometric reader with finger vein and fingerprint authentication;
- Full Access Control Features: Webserver(Optional) ; Anti-passback; Access control interface for 3rd party electric lock, door sensor, exit button, alarm and doorbell;
- Unsurpassed performance with highly accurate finger vein recognition technology;
- New Firmware: Adopts new firmware which optimizes various functions and supports flexible user privilege setting for multi-level management;

Multi-Biometric features extraction process:

Press the finger on the sensor → Capture both fingerprint and finger vein images → Get the unique points and generate templates → Compare that templates with the data which in device's database → Show the result on the device screen.

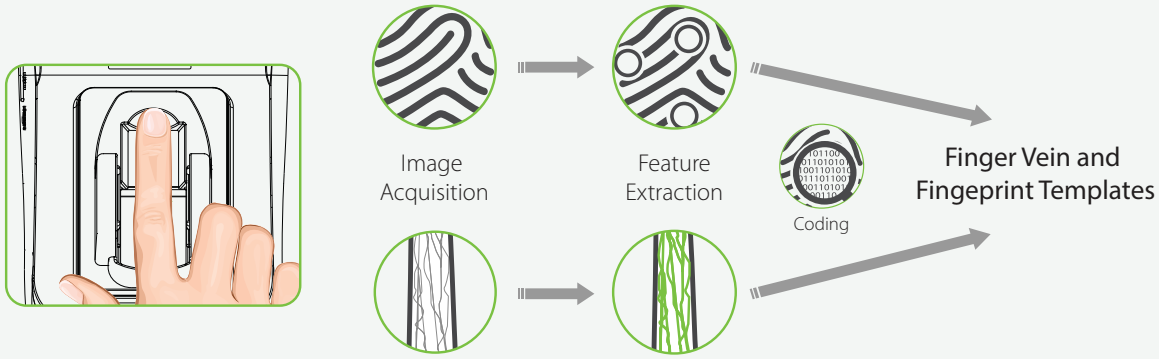

Specifications

Display	2.4-inch TFT LCD Color Screen
Fingerprint Capacity	1,000
Vein Capacity	1,000
Card Capacity	5,000 (Optional) ID / Mifare / HID Proximity card / iCLASS card
Transaction Capacity	100,000
Sensor	ZK Finger vein senor
Algorithm Version	ZKFinger VX10.0, ZKFingerVein VX3.0
Communication	TCP / IP, USB-host, WIFI (Optional)
Access Control Interface	3rd Party Electric Lock, Door Sensor, Exit Button, Alarm, Doorbell
Wiegand Signal	Input and Output, SRB
Aux. Input	1ea for linkage function
Functions	DST, Record Query, Anti-passback
Optional Functions	Webserver, WorkCode, Printer, Wireless Doorbell
Power Supply	12V DC, 3A
Operating Temperature	0 °C- 45 °C
Operating Humidity	20%-80%
SDK and Software	Standalone SDK, ZKAccess3.5 software
Dimension(L x W x H)	210.9 x 80.1 x 96mm

Optional Accessories

RFID Reader

Exit Button

Electric Lock

Alarm

Sensor

Configuration

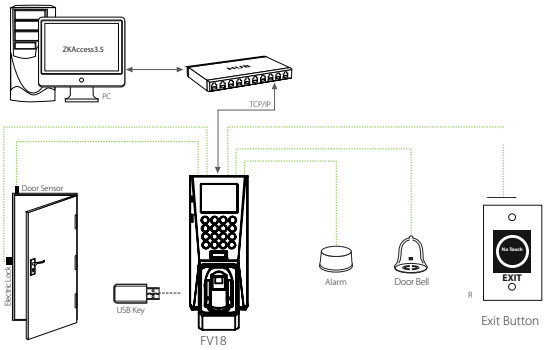

Dimensions (mm)

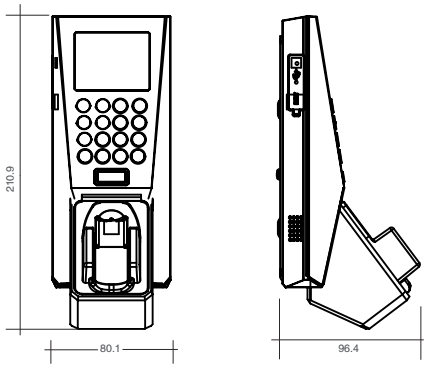

ZKTECO CO.,LTD.
E-mail: sales@zkteco.com
www.zkteco.com

© Copyright 2017. ZKTECO CO.,LTD. ZKTeco Logo is a registered trademark of ZKTeco or a related company. All other product and company names mentioned are used for identification purposes only and may be the trademarks of their respective owners. All specifications are subject to change without notice. All rights reserved.