# DH-PFL0550-E6D

## 6 MegaPixel 5-50mm Lens

## Technical Specifications

| Model | | DH-PFL0550-E6D |
|---|---|---|
| **Parameter** | | |
| Image format | | 1/2.7″ |
| Focal length | | 5-50mm |
| Lens pixel | | 6MP |
| Aperture | | F1.6 |
| Mount | | CS |
| Field Angle (D*H*V) | 1/2.7″ | W: 65.7°x49.6°x36.9°<br>T: 5.2°x7°x5.2° |
| | 1/2.9″(3:2) | W: 58.1°x47°x33.2°<br>T: 8.1°x6.6°x4.7° |
| | 1/4″ | W: 42°x33°x25°<br>T: 5.9°x4.7°x3.6° |
| Lens Control | Focus | Manual |
| | Zoom | Manual |
| | Iris | DC-iris |
| IR Correction | | Yes |
| M.O.D. | | 0.5m(1.64ft) |
| Dimension | | ϕ44x85.7mm(ϕ1.73″x3.37″) |
| Weight | | 0.2kg(0.44lb) |
| Operating temperature | | -30℃～+70℃(-22℉~158℉) |
| Humidity | | <90% RH |

## Order Information

| Type | Part Number | Description |
|---|---|---|
| Lens | DH-PFL0550-E6D | 6 MegaPixel 5-50mm Lens<br>_Dahua brand |
| | PFL0550-E6D | 6 MegaPixel 5-50mm Lens<br>_Neutral, no brand |

## Dimensions(mm/inch)

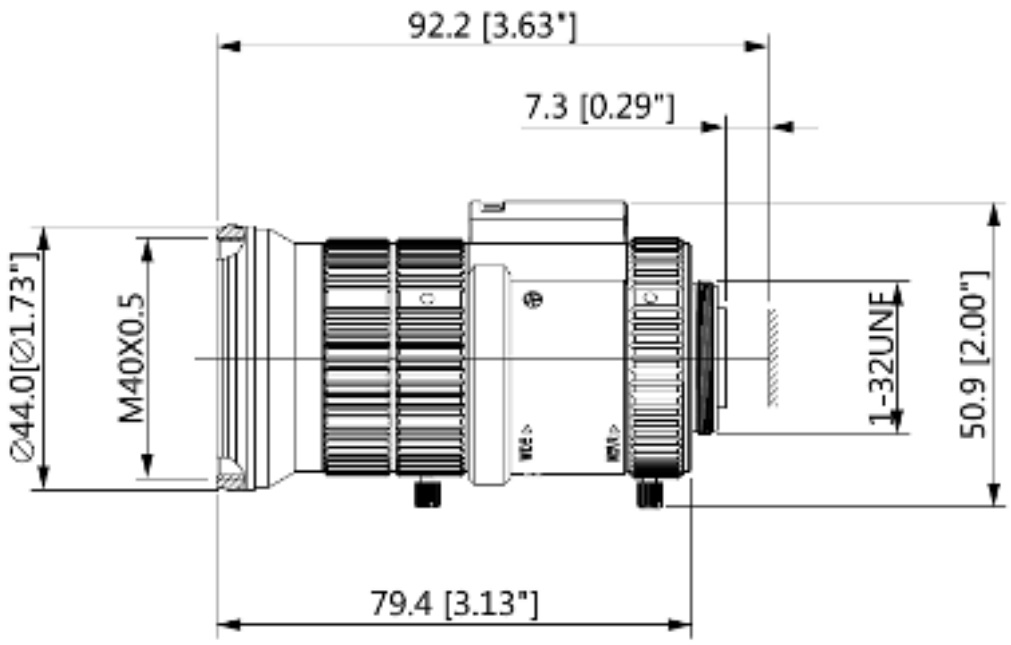


## Application

© 2016 Dahua. All rights reserved. Design and specifications are subject to change without notice.