DH-PLZ21C0-D

12 MegaPixel 4K Lens

Specifications

Model		DH-PLZ21C0-D
Parameter		
Image format		1/1.7″
Focal length		10.5-42mm
Aperture		F1.5
Field Angle		W:46.9° x37.2° x27.6° T: 14.2° x11.2° x8.4°
M.O.D.		0.3m
TV Distortion		-3%(Wide)
IR Correction		Yes
Lens Control	Focus	Manual
	Zoom	Manual
	Iris	DC-Iris
Mount		CS
Dimension		Ø52x90.5mm
Weight		320g
Operating temperature		-30℃～+70℃

DH-PLZ21C0-D

Dimensions (mm)

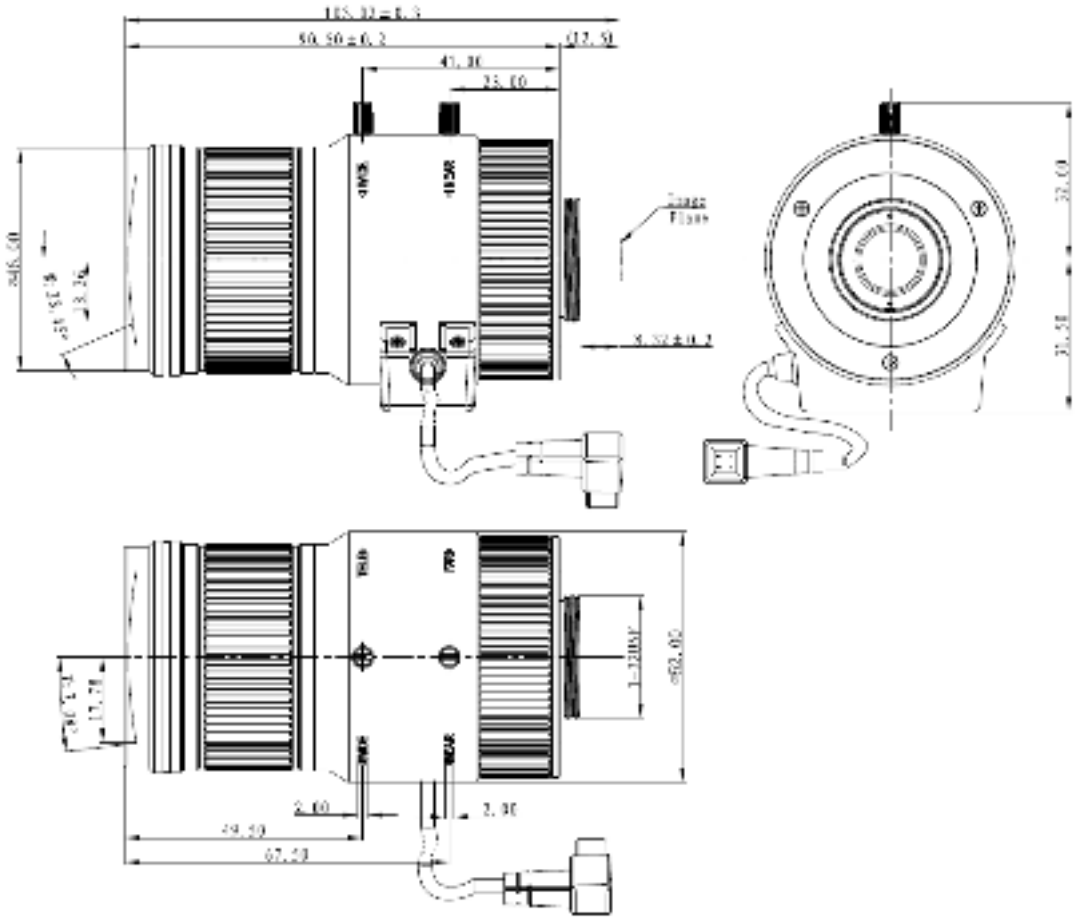

Dahua Technology Co., Ltd.

1199 BinAn Road, Binjiang District, Hangzhou, China

Tel: +86-571-87688883

Fax: +86-571-87688815

Email: overseas@dahuatech.com

www.dahuasecurity.com

*Design and specifications are subject to change without notice.

© 2014 Dahua Technology Co., Ltd.