EPA6220 / EPA6236

AHD 1080p IR / IP66 Outdoor Speed Dome

True Day/Night and WDR (20x / 36x Optical Zoom)

---

eZ.HD

User's Manual

EverFocus

Copyright © EverFocus Electronics Corp.

Release Date: July, 2019

Copyright © 1995 - 2019 EverFocus Electronics Corp.

Disclaimer

All the images including product pictures or screen shots in this document are for example only. The images may vary depending on the product and software version. Information contained in this document is subject to change without notice.

Copyright

All rights reserved. No part of the contents of this manual may be reproduced or transmitted in any form or by any means without written permission of the EverFocus Electronics Corporation.

EverFocus
2F., No.12, Ln. 270, Sec. 3, Beishen Rd.,
Shenkeng Dist., New Taipei City 222, Taiwan
TEL: +886 2 2662 2338
FAX: +886 2 2662 3632
www.everfocus.com.tw

July, 2019

About this document

All the safety and operating instructions should be read and followed before the unit is operated. This manual should be retained for future reference. The information in this manual was current when published. The manufacturer reserves the right to revise and improve its products. All specifications are therefore subject to change without notice.

Regulatory Notices

FCC Notice "Declaration of Conformity Information"

This equipment has been tested and found to comply with the limits for a Class A digital device, pursuant to part 15 of the FCC Rules. These limits are designed to provide reasonable protection against harmful interference in a residential installation. This equipment generates, uses and can radiate radio frequency energy and, if not installed and used in accordance with the instructions, may cause harmful interference to radio communications. However, there is no guarantee that interference will not occur in a particular installation. If this equipment does cause harmful interference to radio or television reception, which can be determined by turning the equipment off and on, the user is encouraged to try to correct the interference by one or more of the following measures:

- Reorient or relocate the receiving antenna.
- Increase the separation between the equipment and receiver.
- Connect the equipment into an outlet on a circuit different from that to which the receiver is connected.
- Consult the dealer or an experienced radio/TV technician for help.

Warning: Changes or modifications made to this equipment, not expressly approved by EverFocus or parties authorized by EverFocus could void the user's authority to operate the equipment.

This device complies with part 15 of the FCC Rules. Operation is subject to the following two conditions:

(1) This device may not cause harmful interference, and

(2) This device must accept any interference received, including interference that may cause undesired operation.

EPTZ cameras comply with CE and FCC.

Precautions

1. **Do not install the camera near electric or magnetic fields.**
   Install the camera away from TV/radio transmitters, magnets, electric motors, transformers and audio speakers since the electromagnetic fields generated from these devices may distort the video image or otherwise interfere with camera operation.
2. **Never disassemble the camera beyond the recommendations in this manual nor introduce materials other than those recommended herein.**
   Improper disassembly or introduction of corrosive materials may result in equipment failure or other damage.
3. **Try to avoid facing the camera toward the sun.**
   In some circumstances, direct sunlight may cause permanent damage to the sensor and/or internal circuits, as well as creating unbalanced illumination beyond the capability of the camera to compensate.
4. **Keep the power cord away from water and other liquids and never touch the power cord with wet hands.**
   Touching a wet power cord with your hands or touching the power cord with wet hands may result in electric shock.
5. **Never install the camera in areas exposed to oil, gas or solvents.**
   Oil, gas or solvents may result in equipment failure, electric shock or, in extreme cases, fire.
6. **Cleaning**
   For cameras with interchangeable lenses, do not touch the surface of the sensor directly with the hands. Use lens tissue or a cotton tipped applicator and ethanol to clean the sensor and the camera lens. Use a damp soft cloth to remove any dirt from the camera body. Please do not use complex solvents, corrosive or abrasive agents for cleaning of any part of the camera.
7. **Do not operate the camera beyond the specified temperature, humidity or power source ratings.**
   Use the outdoor camera at temperatures within -40°C ~ +60°C ≦ 95% / -40°F ~ +140°F ≦ 95%; this device is not rated as submersible. The input power source is 12VDC Be sure to connect the proper + / - polarity and voltage, as incorrect polarity or too high a voltage will likely cause the camera to fail, and such damage is not covered by the warranty. The use of properly fused or Class 2 power limited type supplies is highly recommended.
8. **Mounting**
   Use care in selecting a solid mounting surface which will support the weight of the camera plus any wind, snow, ice or other loading, and securely attach the camera to the mounting surface using screws and anchors which will properly support the camera. If necessary (e.g. when mounting to drop ceilings) use a safety wire to provide additional support for the camera.

CONTENTS

1. Introduction 1
1.1 Features 1
1.2 Dimensions 1
1.3 Packing List 2
1.4 Optional Accessories 2
2. Installation 3
2.1 Wall Mounting 3
2.2 Corner Mounting 4
2.3 Pole Mounting 5
2.4 Ceiling Mounting 6
2.5 Cable Connection 7
2.5.1 Coaxial and RS-485 Cables 7
2.5.2 Power Cable 7
3. OSD Menu Tree 8
4. OSD Menu 10
4.1 System 10
4.2 Dome 11
4.2.1 COMM 11
4.2.2 IR DISPLAY *11*
4.2.3 GUARD TOUR *12*
4.2.4 A-B SCAN *13*
4.2.5 PAN SCAN *13*
4.2.6 PATTERN *14*
4.2.7 PARK ACTION *14*
4.2.8 PRIVACY ZONE *15*
4.2.9 ADVANCED *15*
4.3 Camera 16
4.4 Display 16
4.5 Language 17
4.6 Timing Task 17
4.6.1 TIME SETTING *17*
4.6.2 TIME TASK *17*
4.7 Alarm 18
4.8 Reset 18
5. Specifications 19
Appendix 21
A.Shortcut Commands 21
B.Troubleshooting 22

1. Introduction

The EPA6220 / EPA6236 1080p speed dome cameras come with 20x / 36x optical zoom lens respectively. Equipped with a weather-resistant (IP66) housing, the models meet a wide variety of needs for outdoor surveillance. The speed dome cameras support AHD, TVI, CVI and CVBS video formats, which are switchable via shortcut commends (please refer to *Appendix A Shortcut Commands)*.

EPA6220 / EPA6236 provides variable pan / tilt speeds for fast and accurate monitoring. A maximum of 220 preset points can be configured for precise location of target areas. Features like A-B scan, 4 patterns, 8 tours are all provided. The speed dome cameras also feature IR-Cut Filter, which can be removed or attached manually or automatically switched based on the detected light levels. A built-in fan and heater are also equipped in the speed dome camera.

1.1 Features

- AHD 1080p Sony CMOS sensor
- 20x optical zoom lens (for EPA6220) / 36x optical zoom lens (for EPA6236)
- Supports UTC & RS-485 communication
- True Day and Night (IR-cut filter removable)
- Supports D-WDR
- Supports 220 preset positions
- Supports 8 tours (16 positions each tour)
- IP66-rated with metal housing
- Supports OSD menu

1.2 Dimensions

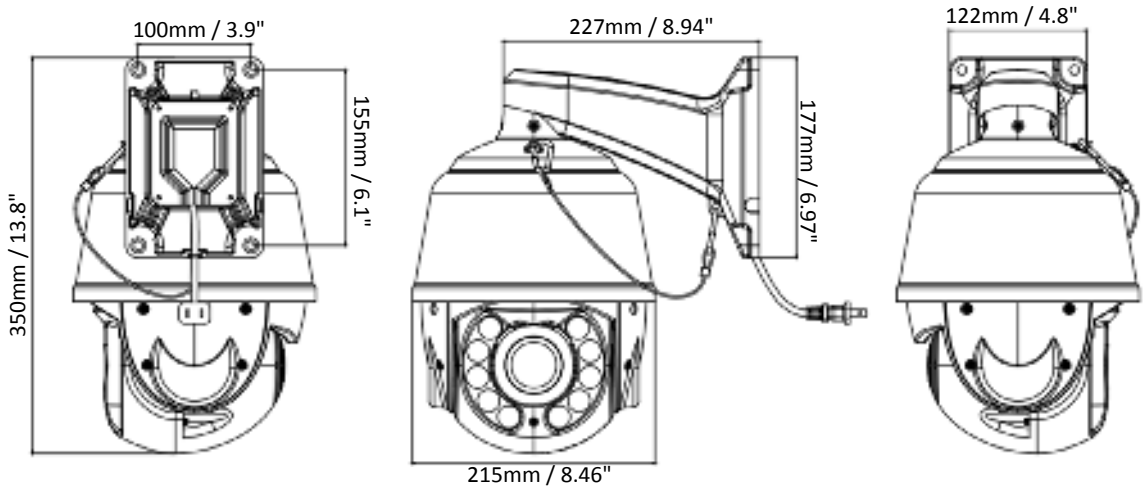

1.3 Packing List

1. Speed Dome Camera x 1
2. Wall Mount Bracket x 1
3. Power Supply (12VDC, 4A) x 1
4. Screw Kit x 1
5. Quick Installation Guide x 1

Note:

1. Equipment configurations and supplied accessories vary by country. Please consult your local EverFocus office or agents for more information. Please also keep the shipping carton for possible future use.
2. Contact the shipper if any items appear to have been damaged in the shipping process.

1.4 Optional Accessories

- **Pole Mount Bracket**

- **Corner Mount Bracket**

- **Pendant Mount Bracket**

- **EKB700 Keyboard (RS-485)**

2. Installation

2.1 Wall Mounting

You can use the supplied **Wall Mount Bracket** to install the speed dome camera to the concrete wall. Note that the wall should be withstood at least 4 times the weight of the speed dome camera.

Wall Mount Bracket

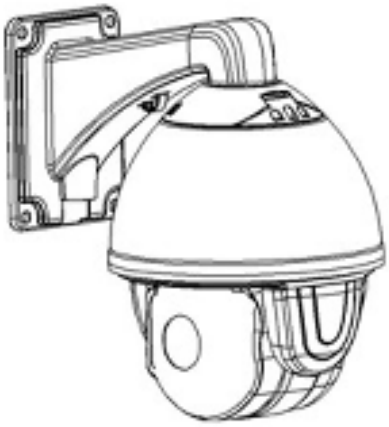

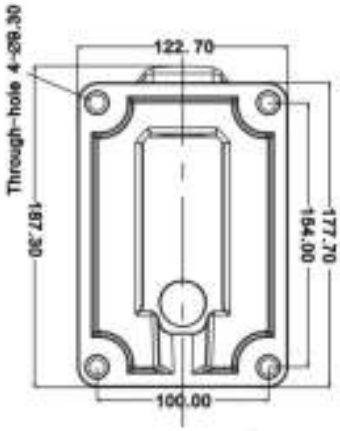

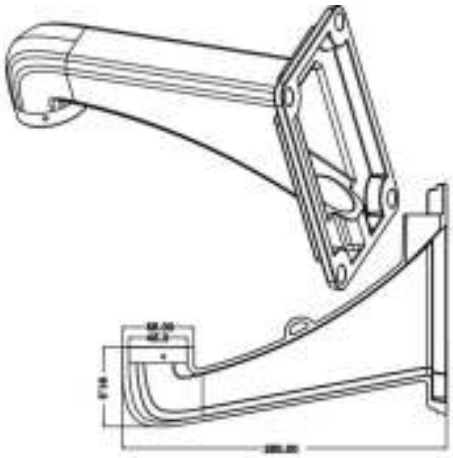

1. Mark the 4 screw holes on the wall based on the **Wall Mount Bracket** and then drill 4 screw-depth holes on the wall.

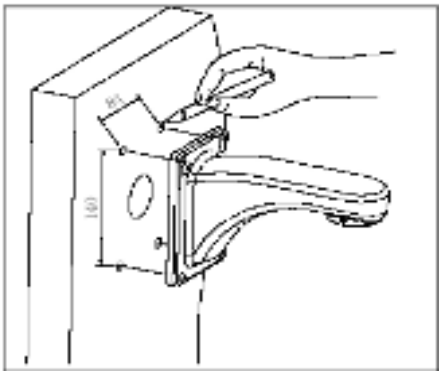

2. Run the cables through the **Wall Mount Bracket** and then screw the **Wall Mount Bracket** to the wall with M8 screws.

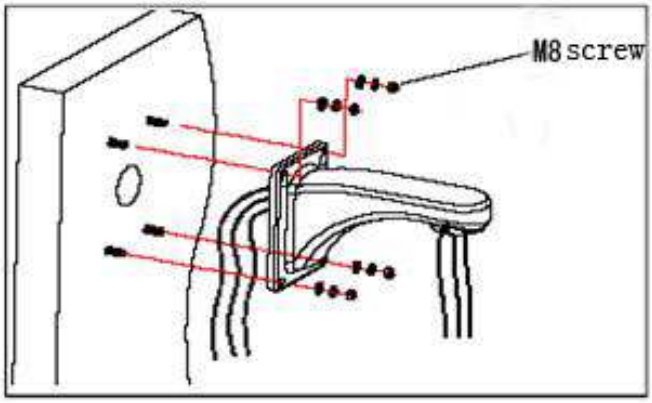

3. Screw the speed dome camera to the **Wall Mount Bracket**.

2.2 Corner Mounting

You can purchase the **Corner Mount Bracket** (please refer to *1.4 Optional Accessories*) to install the speed dome camera to the concrete corner wall with 90°angle. Note that the wall should be withstood at least 4 times the weight of the speed dome camera.

Corner Mount Bracket

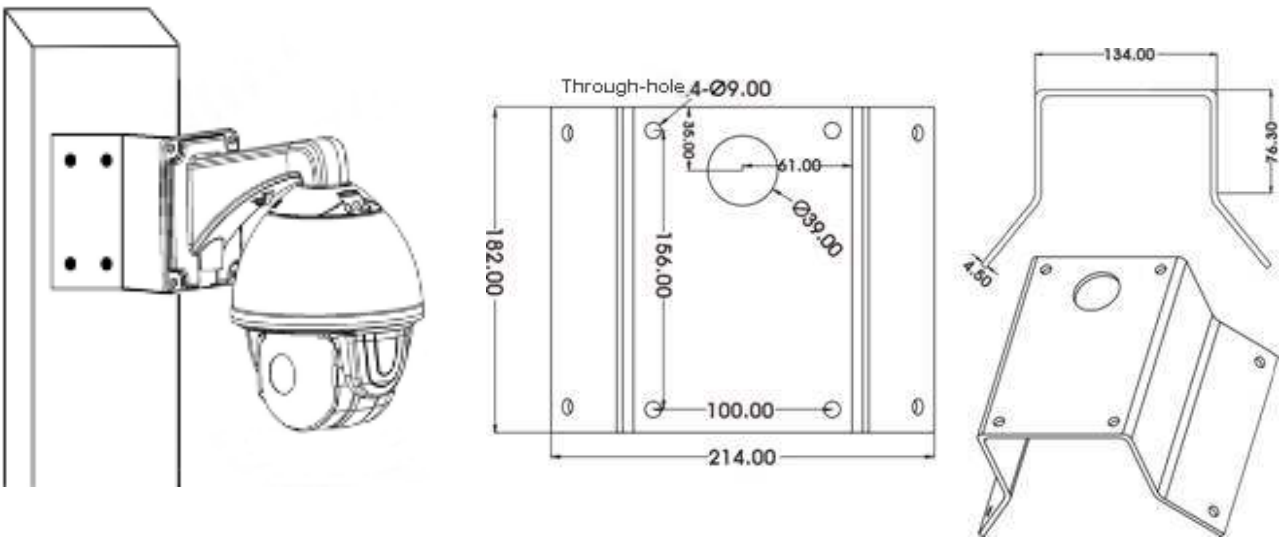

1. Mark the screw holes on the wall based on the **Corner Mount Bracket**, drill the screw-depth holes and then screw the **Corner Mount Bracket** to the wall with M8 screws and screw nuts.

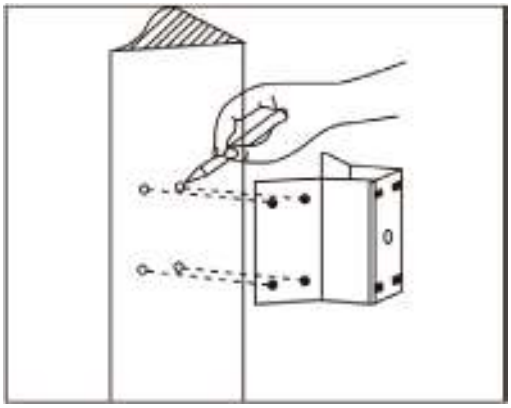

2. Run the cables through the **Wall Mount Bracket** and **Corner Mount Bracket**, and then screw the **Wall Mount Bracket** to the **Corner Mount Bracket**.

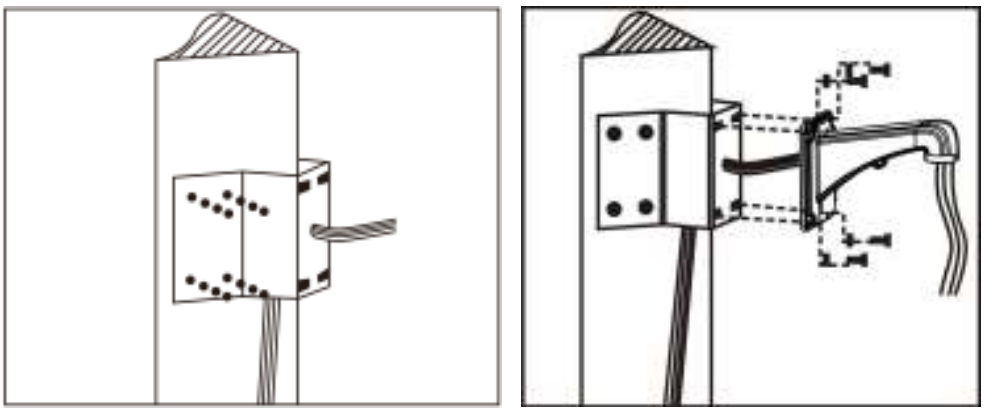

3. Screw the speed dome camera to the **Wall Mount Bracket**.

2.3 Pole Mounting

You can purchase the **Pole Mount Bracket** (please refer to *1.4 Optional Accessories*) to install the speed dome camera to a pole structure with diameter between 130-152mm (max. 6 inches). Note that the pole structure should be withstood at least 4 times the weight of the speed dome camera.

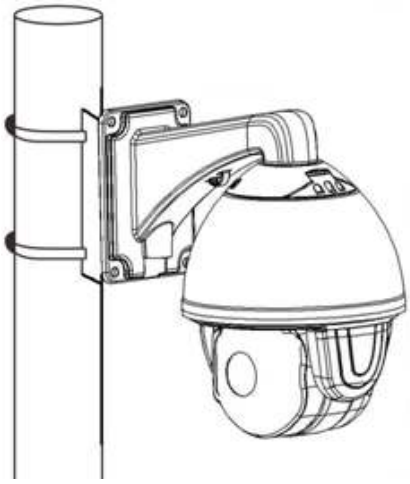

Pole Mount Bracket

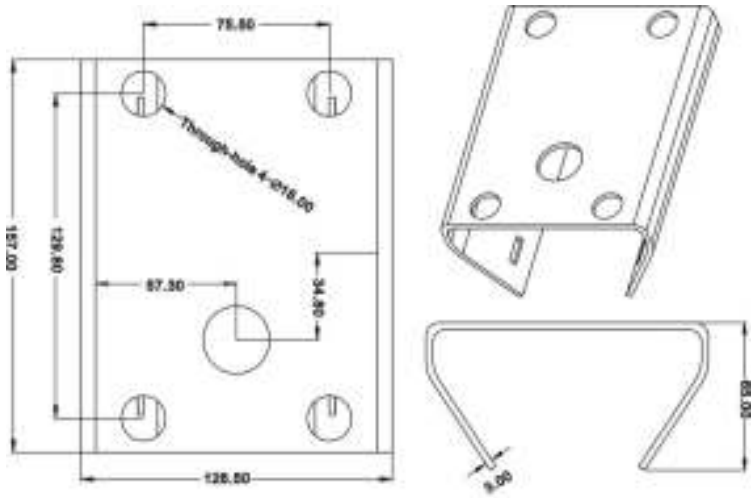

1. Fix the **Pole Mount Bracket** to the pole structure using the Stainless Hose Clamps (ϕ130-152mm).

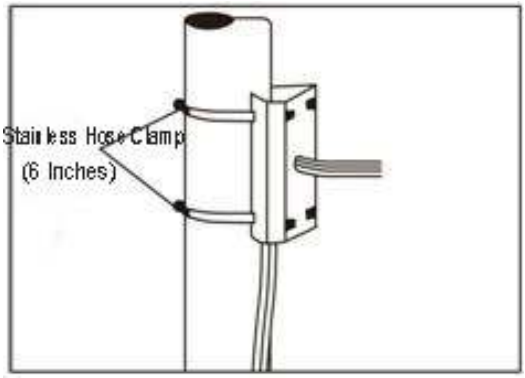

2. Run the cables through the **Wall Mount Bracket** and **Pole Mount Bracket**, and then screw the **Wall Mount Bracket** to the **Pole Mount Bracket**.

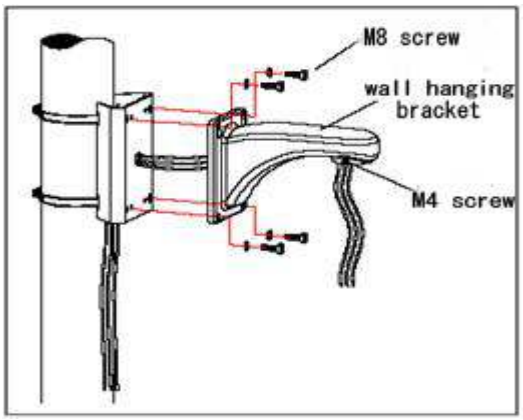

3. Screw the speed dome camera to the **Wall Mount Bracket**.

2.4 Ceiling Mounting

You can purchase the **Ceiling Mount Bracket** (please refer to *1.4 Optional Accessories*) to install the speed dome camera to the ceiling. Note that the ceiling should be withstood at least 4 times the weight of the speed dome camera.

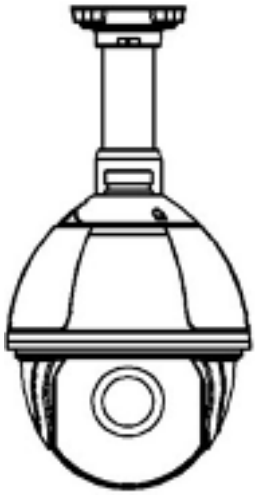

Ceiling Mount Bracket

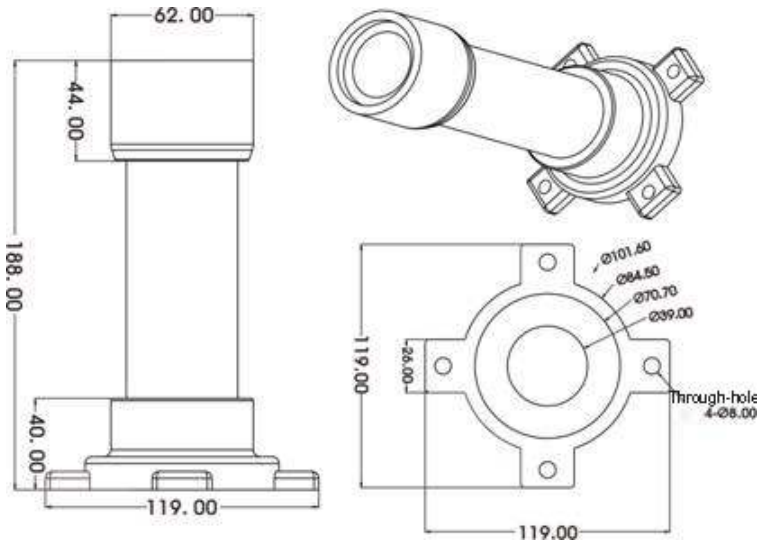

1. Unscrew the M4 screws to remove the **Bracket Base** from the **Ceiling Mount Bracket**. Mark the screw holes on the ceiling based on the **Bracket Base**, drill the screw-depth holes and then screw the **Bracket Base** to the ceiling with M6 screws. You can optionally apply the silica gel to the faying surface between the Bracket Base and ceiling for water proofing.

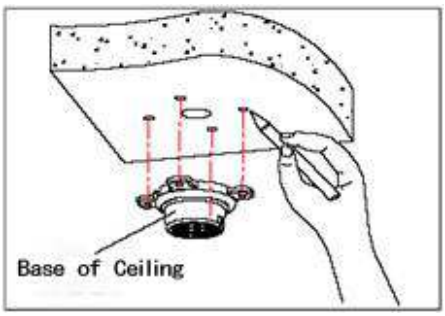

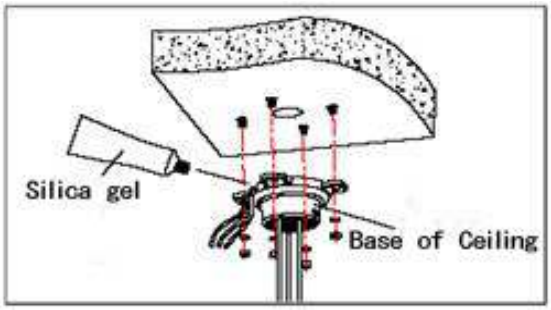

2. Run the cables through the **Ceiling Mount Bracket**, and then screw the **Ceiling Mount Bracket** to the **Bracket Base**. You can optionally apply the silica gel to the joint sleeve for water proofing.

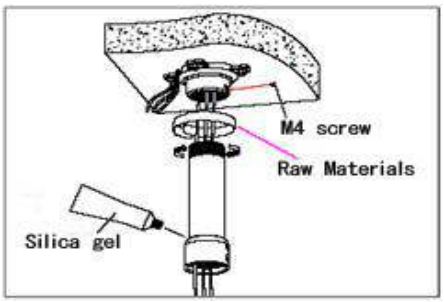

3. Screw the speed dome camera to the **Ceiling Mount Bracket**.

2.5 Cable Connection

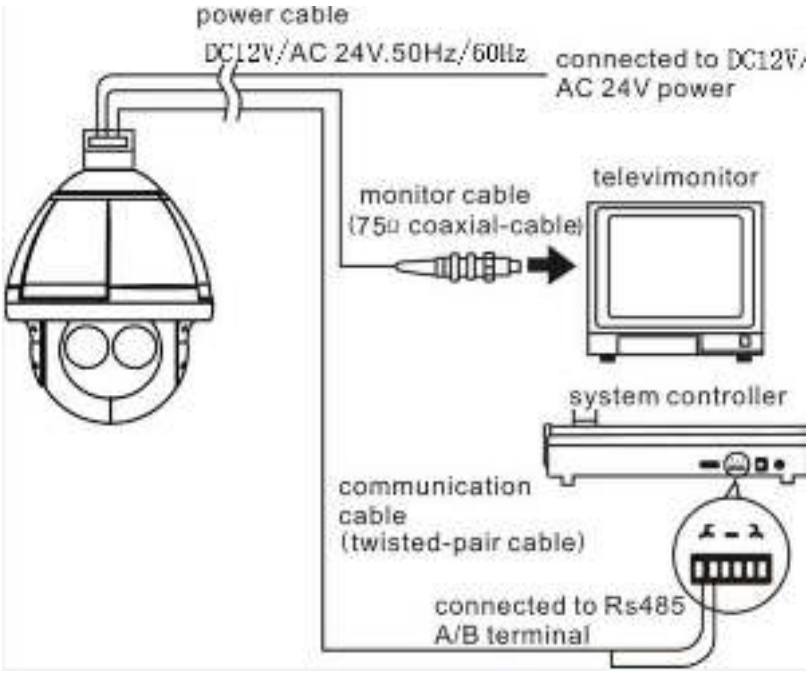

2.5.1 Coaxial and RS-485 Cables

The speed dome cameras support UTC function and RS-485 communication. You can control the speed dome cameras either through UTC (over coaxial cable) or RS-485 (RS-485 wires).

2.5.2 Power Cable

The speed dome cameras support dual power, 12VDC/4A.

In general, the power cable has resistance, there are internal losses when transmitting the voltage, the longer of the cable used, the smaller the wire diameter, the worse loss will suffer. In order to avoid losses of cable causing low voltage and keep the dome work properly, when processing wiring please refer to the requirement below:

Cable Diameter	0.5mm^2(20#)	1.0mm^2(18#)	1.5mm^2(16#)	2.5mm^2(14#)
Dome Distance	11m(37ft)	18m(60ft)	29m(95ft)	46m(152ft)

For example, if a dome is 35 meters away from the power supply , power cable used must be more than 2.5mm^2, otherwise, the dome may suffer insufficient power supply and could not work properly.

Remark: The dome with 12VDC should be less than 3 meters away from power supply.

3. OSD Menu Tree

No.	Main Menu	1st Layer	2nd Layer	3rd Layer
1	System	MFG		
		Protocol		
		Dome ID		
		Comm		
		Temperature		
		Version		
		Exit		
2	Dome	Comm	Device ID	
			Check ID	
			Target ID	1-250
			Soft Protocol	Auto
			Baud Rate	1200, 2400, 4800, 9600
			Comm Reset	
			Save	
			Exit	
		IR Display	Working Mode	Auto, Off, On
			Testing Time	2-15 sec.
			Output Power	40%, 60%, 80%, 100%
			Illumination On	1-15
			Ambient Light	0-50
			IR Switch Zoom	1-10
			Exit	
		Guard Tours	Guard Tour	1-8
			Setting	ID (1-16), Point, Time, Speed
			Init	
			Running	
			Delete	
			Exit	
		A-B Scan	Preset A	0-64
			Preset B	0-64
			Scan Speed	1-64
			Dwell Time	2-60 sec.
			Running	
			Delete	
			Exit	
		PAN Scan	PAN Scan Speed	1-64
			Init	
			Running	
			Exit	
		Pattern	Pattern No	1-4
			Setting	
			Running	
			Delete	
			Exit	
		Park Action	Park Mode	Off, AB Scan, 360, Home, Tour1, Pattern1
			Park Time	1-60 min.
			Setting	
			Call	

			Delete	
			Exit	
		Privacy Zone	N/A	
		Advanced	PWR On Act	Action (memory), Off, AB Scan, 360, Home, Tour1, Pattern1
			Ratio Speed	On, Off
			Auto Flip	On, Off
			Others	N/A
			Exit	
3	Camera	Cam	Auto, CNB, LG, Samsung, Hitachi, Yoko, XF, WX, Sony	
		Zoom Speed	Quick, Slow	
		Digital Zoom	On, Off (Note: Digital Zoom is not functional)	
		Focus	Auto, Manual	
		Iris	Auto, Manual	
		BLC	On, Off	
		Freeze	On, Off	
		Exit		
4	Display	P and T	On, Off	
		Zoom	On, Off	
		Action	On, Off	
		Dome ID	On, Off	
		Comm	On, Off	
		Time	On, Off	
		Exit		
5	Language	Language	English, Spanish, French, Portuguese, Polish, German, Italian	
		Exit		
6	Timing Task	Time Setting	Time-Year	
			Time-Month	
			Time-Date	
			Time-Hour	
			Time-Min	
			Time-Sec	
			Save	
			Exit	
		Timing Task	Off, AB Scan, 360, Tour1, Tour2, Tour3, Tour4, Pattern1, Pattern2,	
		Exit		
7	Alarm	Alarm	On, Off	
		Patrol Time	2-60 sec.	
		Alarm Linkage	On, Off	
		Alarm 1	1-64	
		Alarm 2	1-64	
		Alarm 3	1-64	
		Alarm 4	1-64	
		Release Time	Off, 2-60 sec.	
		Exit		
8	Reset	Dome Restart		
		Sys Data		
		Cam Data		
		Preset		
		Exit		
9	Exit			

4. OSD Menu

MAIN MENU
< SYSTEM >
< DOME >
< CAMERA >
< DISPLAY >
< LANGUAGE >
< TIMING TASK >
< ALARM >
< RESET >
EXIT

4.1 System

MAIN MENU
< SYSTEM >
< DOME >
< CAMERA >
< DISPLAY >
< LANGUAGE >
< TIMING TASK >
< ALARM >
< RESET >
EXIT

SYSTEM	
MFG	
PROTOCOL	AUTO
DOME ID	001
COMM	9600-N-8-1
TEMPERATURE	33
VERSION	A123456
EXIT	

MFG: Max 15 characters displayed on the screen.

PROTOCOL: Displays the protocol of the dome. To configure the value, go to DOME > COMM.

DOME ID: Displays the dome address. To configure the value, go to DOME > COMM.

COMM: Displays the baud rate, check bit, data bit, start bit. To configure the value, go to DOME > COMM.

TEMPERATURE: Displays the temperature of the dome.

VERSION: Displays the version of the dome.

EXIT: Exit the current menu.

4.2 Dome

4.2.1 COMM

MAIN MENU
< SYSTEM >
< DOME >
< CAMERA >
< DISPLAY >
< LANGUAGE >
< TIMING TASK >
< ALARM >
< RESET >
EXIT

DOME
< COMM >
< IR DISPLAY >
< GUARD TOURS >
< A-B SCAN >
< PAN SCAN >
< PATTERN >
< PARK ACTION >
< PRIVACY ZONE >
< ADVANCED >

COMM	
DEVICE ID	160303
CHECK ID	160298
TARGET ID	003
SOFT PROTOCOL	AUTO
BAUD RATE	9600
COMM RESET	
SAVE	
EXIT	

DEVICE ID: The device ID is auto generated by the system.

CHECK ID: To change the TARGET ID, please input the CHECK ID exactly same as the DEVICE ID displays on the screen.

TARGET ID: Target ID is available from 001 to 250, which can be used to distinguish several domes with the same ID.

SOFT PROTOCOL: Select a protocol for the dome.

BAUD RATE: Select a baud rate for the dome. Options include 1200BPS, 2400BPS, 4800BPS and 9600BPS.

COMM RESET: Enter to restore the COMM settings to factory default and then automatically restart the dome.

SAVE: Enter to save all the configurations. The dome will reboot.

EXIT: Exit the current menu.

4.2.2 IR DISPLAY

MAIN MENU
< SYSTEM >
< DOME >
< CAMERA >
< DISPLAY >
< LANGUAGE >
< TIMING TASK >
< ALARM >
< RESET >
EXIT

DOME
< COMM >
< IR DISPLAY >
< GUARD TOURS >
< A-B SCAN >
< PAN SCAN >
< PATTERN >
< PARK ACTION >
< PRIVACY ZONE >
< ADVANCED >

IR DISPLAY	
WORKING MODE	AUTO
TESTING TIME	08S
OUTPUT POWER	100
ILLUMINATION ON	03
AMBIENT LIGHT	17
IR SWITCH ZOOM	07
EXIT	

WORKING MODE: Select an IR working mode for Day/Night switch. Options include Auto, Off (color) and On (black & white). If Auto is selected, the dome will automatically switch from day to night mode when the illumination level is low; or automatically switch from night to day mode when the illumination level is high.

TESTING TIME: If Auto is selected from the IR working mode, you can set up a switch time (switch from day to night or night to day) to activate the switch action.

OUTPUT POWER: Select an output power. Options include 40%, 60%, 80% and 100%.

ILLUMINATION ON: Illumination on is 1 to15 grade selectable and default is 3. If Auto IR working mode is selected, when the Illumination On level is lower than the ambient light, the picture will change to color, the IR illumination will turn off automatically. When the Illumination On level is higher than the ambient light, the picture will change to black and white, the IR illumination will turn on automatically.

AMBIENT LIGHT: Ambient light is a system data. User cannot change it manually. The Ambient Light changes according to the environment all the time. The data will refresh every time when user enter the OSD.

IR SWITCH ZOOM: When zoom value reaches the demanded setting, the IR LEDs with auto switch from near illumination to far illumination.

EXIT: Exit the current menu.

4.2.3 GUARD TOUR

MAIN MENU
< SYSTEM >
< DOME >
< CAMERA >
< DISPLAY >
< LANGUAGE >
< TIMING TASK >
< ALARM >
< RESET >
EXIT

DOME
< COMM >
< IR DISPLAY >
< GUARD TOURS >
< A-B SCAN >
< PAN SCAN >
< PATTERN >
< PARK ACTION >
< PRIVACY ZONE >
< ADVANCED >

GUARD TOURS	
GUARD TOUR	01
SETTING	
INIT	
RUNNING	
DELETE	
EXIT	

GUARD TOUR: Select a number to start setting the Tour function. Up to 8 tours can be set up.

SETTING: You can set-up up to 16 presets to each guard tour. Preset point is from 0-64 (0 is invalid). Dwell time is from 1 to 60s. Speed value is from 1 to 64.

GUARD TOURS	
GUARD TOUR	01
SETTING	
INIT	
RUNNING	
DELETE	
EXIT	

GUARD TOUR			01
ID	POINT	TIME	SPEED
01	017	06	64
02	018	06	64
03	019	06	64
04	020	06	64
05	021	06	64
06	022	06	64
07	023	06	64
08	024	06	64

INIT: Enter to initialize the preset point, dwell time and speed to default value.

RUNNING: Enter to activate this tour function.

DELETE: Enter to delete the setting of this tour. The preset points will display as 0.

EXIT: Exit the current menu.

4.2.4 A-B SCAN

MAIN MENU	DOME	A-B SCAN
< SYSTEM >	< COMM >	PRESET A
< DOME >	< IR DISPLAY >	PRESET B
< CAMERA >	< GUARD TOURS >	SCAN SPEED 03
< DISPLAY >	< A-B SCAN >	DWELL TIME 06s
< LANGUAGE >	< PAN SCAN >	RUNNING
< TIMING TASK >	< PATTERN >	DELETE
< ALARM >	< PARK ACTION >	EXIT
< RESET >	< PRIVACY ZONE >	
EXIT	< ADVANCED >	

PRESET A: Set up A point from preset 0 to 64. To save the position, activate preset 1.

PRESET B: Set up B point from preset 0 to 64. To save the position, activate preset 1.

SCAN SPEED: A-B scan speed can be set up from 1 to 64.

DWELL TIME: Dwell time can be set up from 2s to 60s.

RUNNING: Enter to activate the A-B scan function.

DELETE: Enter to delete the setting of A-B scan. The preset points will display as 0.

EXIT: Exit the current menu.

4.2.5 PAN SCAN

MAIN MENU	DOME	PAN SCAN
< SYSTEM >	< COMM >	PAN SCAN SPEED 03
< DOME >	< IR DISPLAY >	INIT
< CAMERA >	< GUARD TOURS >	RUNNING
< DISPLAY >	< A-B SCAN >	EXIT
< LANGUAGE >	< PAN SCAN >	
< TIMING TASK >	< PATTERN >	
< ALARM >	< PARK ACTION >	
< RESET >	< PRIVACY ZONE >	
EXIT	< ADVANCED >	

PAN SCAN SPEED: Set up the PAN scan speed from 1 to 64. PAN Scan supports 360°clockwise continuous scan.

INIT: Enter to initialize the PAN Scan speed to default value.

RUNNING: Enter to activate the PAN scan function.

EXIT: Exit the current menu.

4.2.6 PATTERN

MAIN MENU	DOME	PATTERN
< SYSTEM >	< COMM >	PATTERN NO 01
< DOME > →	< IR DISPLAY >	SETTING
< CAMERA >	< GUARD TOURS >	RUNNING
< DISPLAY >	< A-B SCAN >	DELETE
< LANGUAGE >	< PAN SCAN >	EXIT
< TIMING TASK >	< PATTERN > →	
< ALARM >	< PARK ACTION >	
< RESET >	< PRIVACY ZONE >	
EXIT	< ADVANCED >	

PATTERN NO: Select a number to start setting the Pattern function. Up to 4 patterns can be set up.

SETTING: Enter to set up the pattern function.

RUNNING: Enter to activate the pattern function.

DELETE: Enter to delete the setting of this pattern.

EXIT: Exit the current menu.

4.2.7 PARK ACTION

MAIN MENU	DOME	PARK ACTION
< SYSTEM >	< COMM >	PARK MODE OFF
< DOME > →	< IR DISPLAY >	PARK TIME 01M
< CAMERA >	< GUARD TOURS >	SETTING
< DISPLAY >	< A-B SCAN >	CALL
< LANGUAGE >	< PAN SCAN >	DELETE
< TIMING TASK >	< PATTERN >	EXIT
< ALARM >	< PARK ACTION > →	
< RESET >	< PRIVACY ZONE >	
EXIT	< ADVANCED >	

PARK MODE: Select a park mode. Options include Off, A-B Scan, 360, Home, Tour1 and Pattern1.

PARK TIME: Select a park time from 1~60 mins.

SETTING: Move to the desired position and save the settings.

CALL: Enter to activate the park function.

DELETE: Delete the settings.

EXIT: Exit the current menu.

4.2.8 PRIVACY ZONE

This speed dome camera does not support the Privacy Zone function.

MAIN MENU	DOME	PRIVACY ZONE	
< SYSTEM >	< COMM >	MASK NO.	01
< DOME >	< IR DISPLAY >	MASK	OFF
< CAMERA >	< GUARD TOURS >	SETTING	
< DISPLAY >	< A-B SCAN >	EXIT	
< LANGUAGE >	< PAN SCAN >		
< TIMING TASK >	< PATTERN >		
< ALARM >	< PARK ACTION >		
< RESET >	< PRIVACY ZONE >		
EXIT	< ADVANCED >		

4.2.9 ADVANCED

MAIN MENU	DOME	ADVANCED	
< SYSTEM >	< COMM >	PWR ON ACT	ACTION
< DOME >	< IR DISPLAY >	RATIO SPEED	ON
< CAMERA >	< GUARD TOURS >	AUTO FLIP	ON
< DISPLAY >	< A-B SCAN >	OTHERS	
< LANGUAGE >	< PAN SCAN >	EXIT	
< TIMING TASK >	< PATTERN >		
< ALARM >	< PARK ACTION >		
< RESET >	< PRIVACY ZONE >		
EXIT	< ADVANCED >		

PWR ON ACTION: Power on action can be set as Action (memory), Off, A-B Scan, 360, Home, Tour1 and Pattern1. When power-on the dome, the dome will activate the selected action.

RATIO SPEED: Ratio speed can be set up as ON or OFF. Intelligent pan and tilt speed is variable based on the zoom factor. When zooming in, the speed will become slower and when zooming out, the speed will become faster.

AUTO FLIP: Auto flip can be set up as ON or OFF status.

OTHERS: This speed dome camera does not support this function.

EXIT: Exit the current menu.

4.3 Camera

MAIN MENU
< SYSTEM >
< DOME >
< CAMERA >
< DISPLAY >
< LANGUAGE >
< TIMING TASK >
< ALARM >
< RESET >
EXIT

CAMERA	
CAM	AUTO
ZOOM SPEED	QUICK
DIGITAL ZOOM	OFF
FOCUS	AUTO
IRIS	AUTO
BLC	OFF
FREEZE	OFF
EXIT	

CAM: Optionally select a brand of the speed dome camera to be displayed.

ZOOM SPEED: Select a zoom speed for the speed dome camera.

DIGITAL ZOOM: This function is not functional.

FOCUS: Select Auto or Manual for the focus mode.

IRIS: Select Auto or Manual for the IRIS. Auto IRIS is recommended.

BLC: Turn on or turn off the BLC function.

FREEZE: Turn on or turn off the Video Freeze function.

EXIT: Exit the current menu.

4.4 Display

MAIN MENU
< SYSTEM >
< DOME >
< CAMERA >
< DISPLAY >
< LANGUAGE >
< TIMING TASK >
< ALARM >
< RESET >
EXIT

DISPLAY	
P AND T	OFF
ZOOM	OFF
ACTION	ON
DOME ID	ON
COMM	ON
TIME	OFF
EXIT	

P AND T: Turn on or off to display the pan and tilt degree on the screen.

ZOOM: Turn on or off to display the zoom information.

ACTION: Turn on or off to display the current action, such as A-B Scan, Call Preset, Save preset, Call Park Action, Pan Scan and etc.

DOME ID: Turn on or off to display the dome ID on the top-left corner of the screen.

COMM: Turn on or off to display the communication speed on the top-left corner of the screen.

TIME: Turn on or off to display the system time on the screen.

EXIT: Exit the current menu.

4.5 Language

You can select a language for the dome.

MAIN MENU
< SYSTEM >
< DOME >
< CAMERA >
< DISPLAY >
< LANGUAGE >
< TIMING TASK >
< ALARM >
< RESET >
EXIT

LANGUAGE	
LANGUAGE	ENGLISH
EXIT	

4.6 Timing Task

4.6.1 TIME SETTING

You can set up the system date and time in this menu.

MAIN MENU
< SYSTEM >
< DOME >
< CAMERA >
< DISPLAY >
< LANGUAGE >
< TIMING TASK >
< ALARM >
< RESET >
EXIT

TIMING TASK
TIME SETTING
TIMING TASK
EXIT

TIME SETTING	
TIME-YEAR	2019
TIME-MONTH	01
TIME-DATE	21
TIME-HOUR	13
TIME-MIN	15
TIME-SEC	46
SAVE	
EXIT	

4.6.2 TIME TASK

You can set up time task in this menu. Up to 6 time schedules can be set up for functions including A-B Scan, 360 Pan, Tour1, Tour2, Tour3, Tour4, Pattern1, Pattern2, Pattern3 and Pattern4.

MAIN MENU
< SYSTEM >
< DOME >
< CAMERA >
< DISPLAY >
< LANGUAGE >
< TIMING TASK >
< ALARM >
< RESET >
EXIT

TIMING TASK
TIME SETTING
TIMING TASK
EXIT

START	END	FUNCTION
00 00	00 00	OFF
00 00	00 00	OFF
00 00	00 00	OFF
00 00	00 00	OFF
00 00	00 00	OFF
00 00	00 00	OFF
EXIT		

4.7 Alarm

MAIN MENU
< SYSTEM >
< DOME >
< CAMERA >
< DISPLAY >
< LANGUAGE >
< TIMING TASK >
< ALARM >
< RESET >
EXIT

ALARM	
ALARM	OFF
PATROL TIME	06S
ALARM LINKAGE	OFF
ALARM 1	01
ALARM 2	02
ALARM 3	03
ALARM 4	04
RELEASE TIME	OFF
EXIT	

ALARM: Turn on or off the Alarm function.

PATROL TIME: Patrol time can be set up from 2~60s.

ALARM LINKAGE: Turn on or off the Alarm Linkage function. If On is selected, you can further set up an alarm linkage preset point in the below field.

ALARM 1: To run alarm 1, presets 1-64 are available.

ALARM 2: To run alarm 2, presets 1-64 are available.

ALARM 3: To run alarm 3, presets 1-64 are available.

ALARM 4: To run alarm 4, presets 1-64 are available.

RELEASE TIME: You can set up the alarming release time from 2-60s; or select Off to turn off the release time.

EXIT: Exit the current menu.

4.8 Reset

MAIN MENU
< SYSTEM >
< DOME >
< CAMERA >
< DISPLAY >
< LANGUAGE >
< TIMING TASK >
< ALARM >
< RESET >
EXIT

RESET
DOME RESTART
SYS DATA
CAM DATA
PRESET
EXIT

DOME RESTART: Enter to restart the speed dome camera.

SYS DATA: Enter to restore the system data to factory default.

CAM DATA: Enter to restore the dome data to factory default.

PRESET: Enter to delete the setup preset points.

EXIT: Exit the current menu.

5. Specifications

Product Model	EPA6220	EPA6236
Pickup Device	Sony CMOS sensor	
Output Pixels (H x V)	1920 x 1080 (30 / 25 FPS)	
Lens	20x optical zoom, 4.7~94mm	36x optical zoom, 4.6~165mm
Video Format	AHD / TVI / CVI / CVBS switchable	
System Format	NTSC / PAL switchable	
Min. Illumination	Color: 0.01Lux ; B/W: 0.001Lux	
S/N Ratio	≥50dB	
Zoom Ratio	Max. 20x (optical)	Max. 36x (optical)
True Day / Night	Supported	
BLC	On / Off	
WDR	D-WDR (auto)	
AGC	Auto	
WB	Auto	
Motion Detection	Not supported	
Defog	Not supported	
Privacy Mask	Not supported	
Alarm	Not supported	
Focus Control	Auto / Manual	
OSD Menu	Supported	
Video Output	1Vp-p, 75Ω	
IR LED	8 units	
IR Range	150m / 492ft.	
Auto Flip	Horizontal 180°, Vertical 93°	
Preset Points	220 preset points (dwell time 01-60s)	
A-B Scan	User programmable (scan speed 1-64)	
Tour	8 tours (max.16 preset points each tour)	
PWR on Action	Action (Memory), Off, AB Scan, 360, Home, Tour1, Pattern1	
Park Mode	Off, AB Scan, 360, Home, Tour1, Pattern1 (park time 1-60m)	
Pattern Scan	4 patterns (max.15 minutes, max.512 commands)	
Time Scheduling	6 tasks (AB Scan, 360 Pan, Tour 1-4, Pattern 1-4)	
Rotation Range	Pan: 0°~360°, Tilt: 0°~93°	
Rotation Speed	Pan: 0~480°/s, Tilt:0~240°/s	
Communication	RS-485, Coaxial	
Communication Speed	1200 / 2400 / 4800 / 9600bps	
Built-in Protocols	Pelco-P / Pelco-D (auto)	
Address Editable	Supported (OSD switch)	

ID Address	0 ~ 255
Power Source	12VDC, 4A
Power Consumption	≤ 25W
Weather Resistance	IP66
Operating Temperature	-40°C ~ 60°C ≤ 95% / -40°F ~ 140°F ≤ 95%
Package Size (W x D x H)	310 x 310 x 440mm / 12.2” x 12.2” x 17.32”
Weight	12VDC: 6.1kg / 13.45lb
Certificates	CE, FCC

Appendix

A. Shortcut Commands

The speed dome camera supports AHD, TVI, CVI and CVBS video formats, which are switchable via shortcut commends. The shortcut commends are only compliant with Pelco-D and its extended protocol. Users can use the shortcut commend to enable the functions described as below:

Preset No.	Function	Preset No.	Function
81（41）	Auto day/night	**97**	Call tour 2
82（42）	Switch to night	**98（38）**	Call tour 1
83	Switch to day	**99（39）**	Pan scan
84	Force on far light	**Twice 137**	Switch to AHD
85	Force on near light	**Twice 138**	Switch to TVI
92	A-B Scan	**Twice 139**	Switch to CVI
94	OSD off	**Twice 140**	Switch to CVBS
95	OSD on	**Twice 115**	Switch to NTSC
96	Call tour 3	**Twice 116**	Switch to PAL

Note: If there is no video or the video is displaying black and white, please check whether the video signal output (NTSC / PAL) is compliant with the system format of your region.

B. Troubleshooting

Issue	Possible Reason	Solution
After power is applied, there is no motion (self-test) and no video image	Cable harness is improperly connected	Verify that the orientation of the connector input
	Input power voltage is too low	Verify the voltage of the input power
	Power supply is not working	Change a new power supply
Self-test is normal, but cannot control dome	Wrong communication settings	Set the correct protocol, baud rate and address of dome
	Improper connection of control cable (polarity)	Verify the polarity of the RS485 connection as per the instruction manual
Noise after self-testing	Mechanical obstruction	Verify and correct it
	Camera module is not installed correctly	Check the module installation
	Low power	Change the correct power supply
Image is not stable	Low power	Check the power supply or make sure the power input
	Video cable is improperly contacted	Verify the contact of the video cable
Image is blurring	Camera is on manual focus	Change to auto focus
	The lens is dusted	Clean the lens
Control to the dome is not smooth	Power is too low	Change the DC 12V Power supply
	Communication distance is too far	Make sure the distance is in the allowed range
	RS485 cable is not properly connected	Make sure the RS485 is properly connected
	Too many domes connected	Make sure the quantity of the connected domes are allowed

EverFocus Electronics Corp.

EverFocus Taiwan:
2F., No.12, Ln. 270, Sec. 3, Beishen Rd., Shenkeng Dist., New Taipei City 222, Taiwan
TEL: +886 2 2662 2338
FAX: +886 2 2662 3632
www.everfocus.com.tw
marketing@everfocus.com.tw

EverFocus China - Shenzhen:
4F, No. 2, D4 Building, Wan Yelong Industrial Park, Tangtou Road, Shiyan, Baoan, Shenzhen, Guangdong 518101, China
TEL: +86 755 2765 1313
FAX: +86 755 2765 0337
www.everfocus.com.cn
marketing@everfocus.com.cn

EverFocus China - Beijing:
Room 609, Technology Trade Building, Shangdi Information Industry Base, Haidian District, Beijing 100085, China
TEL: +86 10 6297 3336~39
FAX: +86 10 6297 1423
www.everfocus.com.cn
marketing@everfocus.com.cn

EverFocus Japan:
3F, Kuramochi, Building II
2-2-3 Koto-Bashi, Sumida-Ku, Tokyo, 130-0022, Japan
TEL: +81-3-5625-8188
FAX: +81 3 5625 8189
www.everfocus.co.jp
info@everfocus.co.jp

EverFocus USA - California:
1801 Highland Avenue, Unit A, Duarte, CA 91010, USA
TEL: +1 626 844 8888
FAX: +1 626 844 8838
www.everfocus.com
sales@everfocus.com

Your EverFocus product is designed and manufactured with high quality materials and components which can be recycled and reused.
This symbol means that electrical and electronic equipment, at their end-of-life, should be disposed of separately from your household waste.
Please, dispose of this equipment at your local community waste collection/recycling centre.
In the European Union there are separate collection systems for used electrical and electronic product.
Please, help us to conserve the environment we live in!

Ihr EverFocus Produkt wurde entwickelt und hergestellt mit qualitativ hochwertigen Materialien und Komponenten, die recycelt und wieder verwendet werden können.
Dieses Symbol bedeutet, dass elektrische und elektronische Geräte am Ende ihrer Nutzungsdauer vom Hausmüll getrennt entsorgt werden sollen.
Bitte entsorgen Sie dieses Gerät bei Ihrer örtlichen kommunalen Sammelstelle oder im Recycling Centre.
Helfen Sie uns bitte, die Umwelt zu erhalten, in der wir leben!

EverFocus